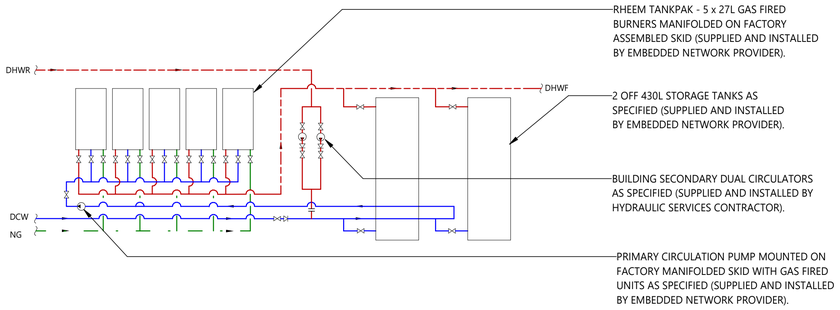

HOT WATER PLANT SCHEMATIC

NOT TO SCALE
FOR INFORMATION ONLY

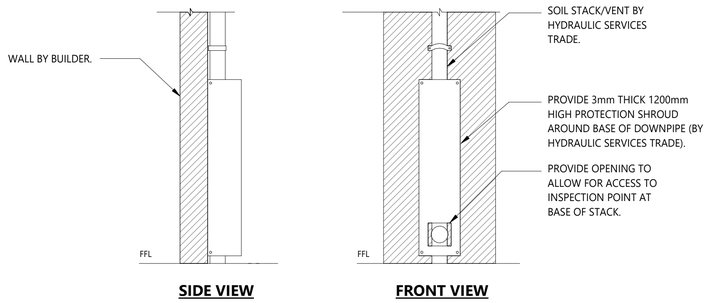

MECHANICAL PROTECTION AT BASE OF STACK DETAIL

NOT TO SCALE
FOR INFORMATION ONLY

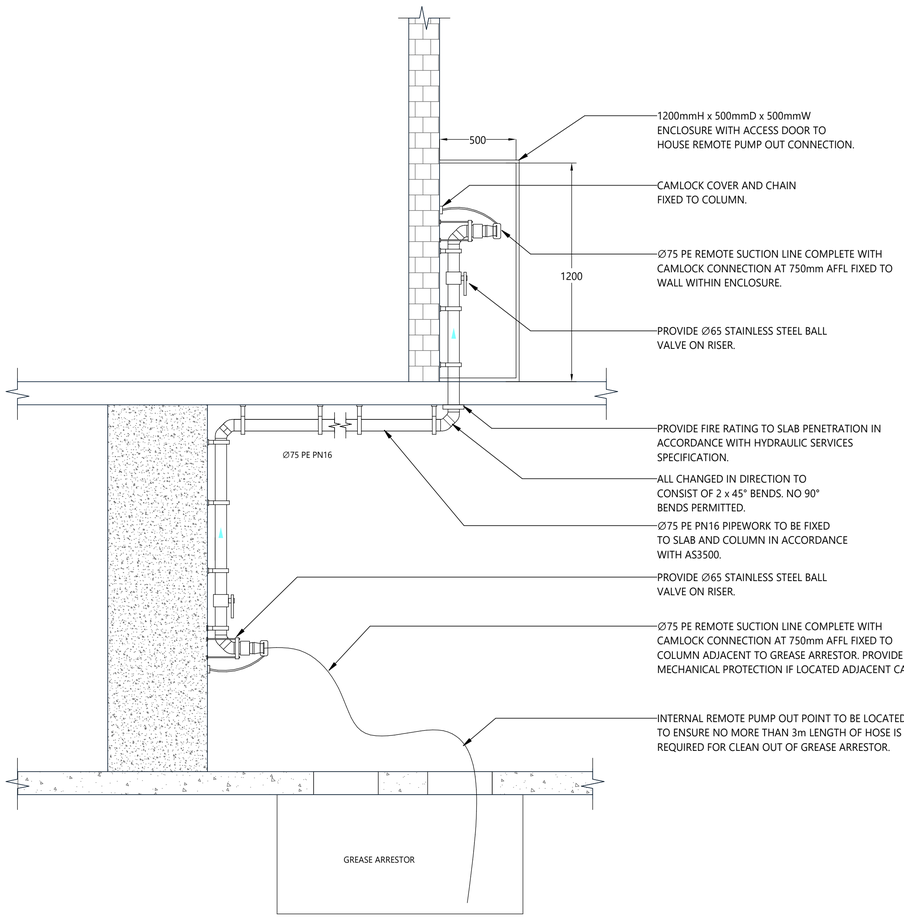

REMOTE PUMP OUT DETAIL

NOT TO SCALE
FOR INFORMATION ONLY

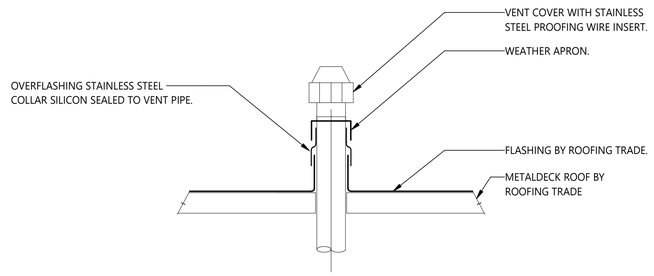

VENT PIPEWORK METAL ROOF PENETRATION DETAIL

NOT TO SCALE
FOR INFORMATION ONLY

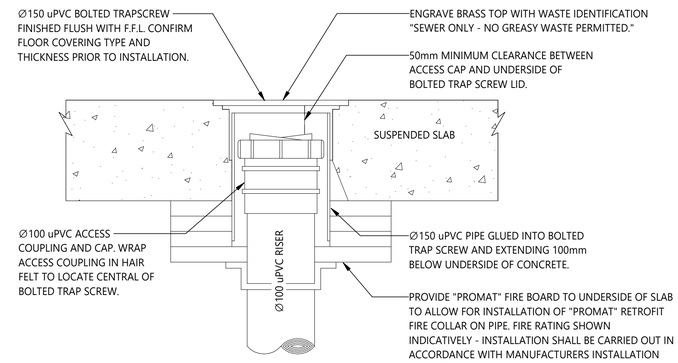

SEALED SEWER SHOP RISER DETAIL

NOT TO SCALE
FOR INFORMATION ONLY

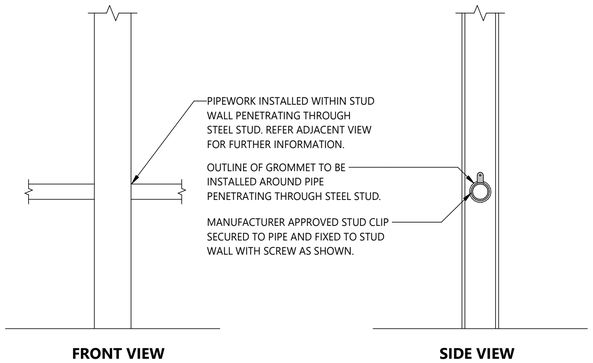

PIPEWORK PENETRATING STUDWORK DETAIL

NOT TO SCALE
FOR INFORMATION ONLY

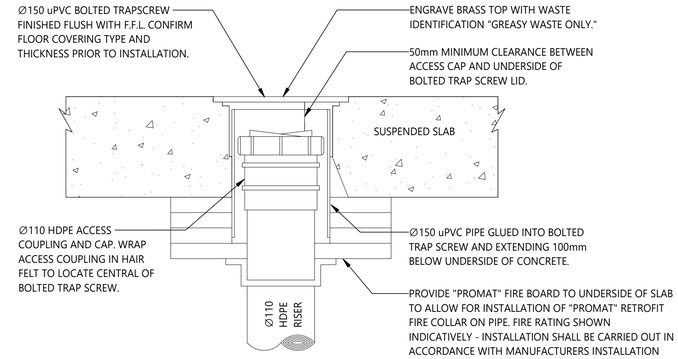

TRADE WASTE SEALED SHOP RISER DETAIL

NOT TO SCALE
FOR INFORMATION ONLY

REV'N	DESCRIPTION	DATE	CHK'D
A	CONSTRUCTION ISSUE	14.02.2020	KR

FOR CONSTRUCTION

TO BE PRINTED IN COLOUR

THE PURPOSE OF THIS DOCUMENT IS INTENDED TO BE VIEWED OR PRINTED IN COLOUR FOR THE FULL EXTENT OF THE SCOPE OF WORKS TO BE SHOWN.

CITIFY bfc GEMMA LEA DESIGN STUDIO

LUCID CONSULTING AUSTRALIA
Level 3/169, Pirie St Adelaide SA 5000
Phone: (08) 8407 9700
Email: adelaide@lucidconsulting.com.au

PROJECT
HYDE PARK PLACE
248 UNLEY ROAD, HYDE PARK
HYDRAULIC SERVICES

DRAWING
DETAILS SHEET 2

NOT FOR CONSTRUCTION PURPOSES UNLESS STAMPED FOR CONSTRUCTION. VERIFY DIMENSIONS AND LEVELS ON SITE BEFORE SETTING OUT. DO NOT SCALE. REFER TO FIGURED DIMENSIONS - IN mm UNLESS OTHERWISE STATED.

Scale	Design: JZ	No. in Set	Date
NTS	Drawn: JZ Review: KR	25 of 25	JAN 2020

Orig. Size	Drawing no.	Revision
A1	LCE14462-H303	A

© Copyright Lucid Consulting Australia 13/02/2020 4:41:30 PM